Ever Reliable
enertork

VTL TECH CO., LTD.
SOLUTIONS PROVIDER FOR INDUSTRIES

19A Cong Hoa Street, Bay Hien Ward, Ho Chi Minh City
Tel: 028 – 3811 0510 / 11 , Email: info@vtltech.com.vn
Fax: 028 – 3811 0512 Website: www.vtltech.com.vn

enertork

Website : www.enertork.com E-mail : sales@enertork.com

The design of our product is subject to change without notice for improvement. Publication No. CAT-20-005 REV0, 2021.02

- **Main office/Factory** 344, Neungyeo-ro, Neungseo-myeon, Yeoju-si, Gyeonggi-do, 12646 **Tel** : 031-880-2800 **Fax** : 031-881-5860
- **Daegu Factory** 327B 8L, Daegu National Industrial Complex, 1287-7, Eung-am-ri, Guji-myeon, Dalseong-gun, Daegu
- **Seoul Office** Yunik Building 18th Fl., 430, Eonju-ro, Gangnam-gu, Seoul, 06210 **Tel** : 02-555-0883 **Fax** : 02-556-3026
- **UAE branch** Enertork Middle East General Trading L.L.C Makateb Building, Office #508, D89 Al Maktoum Road, Port Saeed, Deira, Dubai, UAE **Tel** : +971 4 2948355 **Fax** : +971 4 2943455 **P.O. Box** : 25660
- **Vietnam branch** No. 1 VSIP II-A, Street 30, Vietnam-Singapore Industrial Pack II-A, Vinh Tan Commune, Tan Yuen Town, Binh Duong Province, Vietnam **Tel** : +84 0274-380-3180 **Fax** : +84 0274-380-3190

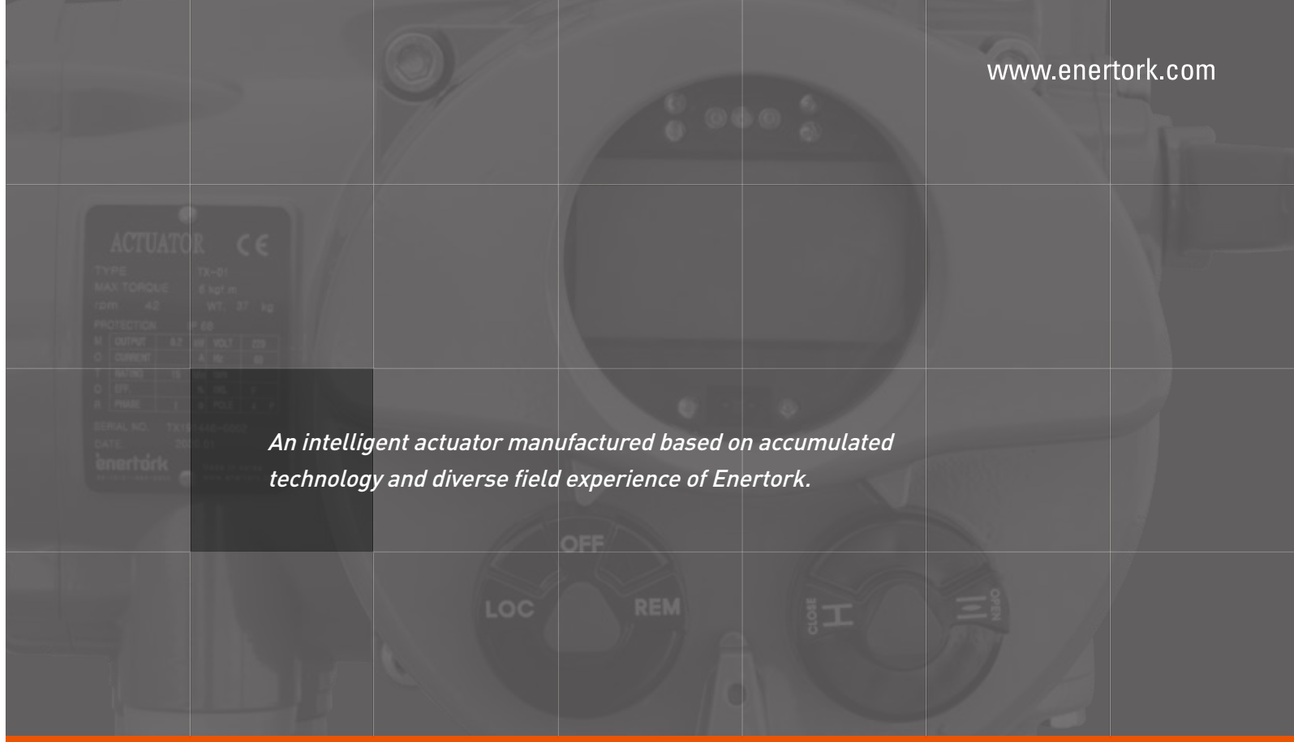

www.enertork.com

An intelligent actuator manufactured based on accumulated technology and diverse field experience of Enertork.

TX SERIES ACTUATOR

Non-intrusive
Intelligent Multi Turn
Actuator

Ever Reliable
enertork

Ever Reliable enertork

Reliable Enertork

Enertork is a specialized company that has been producing electric actuators and related products that drive industrial valves since 1987.
Enertork produces product lines that can be applied in various fields, ranging from water treatment such as water supply and sewage to power generation and petrochemical fields, and sells them to customers all over the world.

Enertork has a 3Q philosophy to fulfill customer needs.

Quick Delivery
Enertork honors delivery dates and proposes the fastest delivery time possible.

Quick Service
Enertork operates service organizations and systems to take action as quickly as possible if a problem occurs related to our product.

Quick Response
Enertork works to give our customers a sense of trust by responding to customer requests as soon as they are received.

CONTENTS

ENERTORK
HISTORY / LINE UP 04

TX SERIES
Description of structure 08
Standard specifications 10
Optional specifications / Waterproof grade / Explosion-proof grade 11
Fieldbus Communication 12
Actuator installation environment / Function for protecting the actuator and securing operational stability 13
LCD function / description 14
Setup menu 15
RPM - torque data 16
Machine data 17
Outside view 18
Selection Guide 19
Special Option 20
- Separate operation panel
- Linear Thrust Unit

Customer service
Standard material table
Quality assurance 24

Status of major certification acquisition 26

HISTORY

Acquired ISO 9001, 14001 quality and environment certification / Listed on KOSDAQ / Acquired certification for occupational health and safety management system

1987

Established

- '87 Established Morgan Korea

1991

Secured product technological capability

- '91 Registered as company for localization by KEPCO
- '91 Entered into technical partnership with Seibu in Japan
- '97 Acquired ISO 9001 quality certification (certification agency DNV)
- '98 Announced new actuator (jointly developed by Western Electric)

2006

Established base

- '02 Registered as qualified supplier for power generation facilities by 5 power generation companies in Korea
- '03 Acquired actuator class 1E (Q class) for nuclear power plants (Certification agency: NTS of U.S.)
- '06 Listed on KOSDAQ
- '08 Acquired CE certification

2010

Established base for overseas entry

- '10 Acquired certification for occupational health and safety management system (OSHAS/KOSHA 18001)
- '11 Changed company name to "Enertork"
- '13 Acquired FM/ATEX/CSA explosion-proof certification
- '19 Acquired NEP certification
- '20 Certified for outstanding products by Public Procurement Service

LINE UP

TM Series

A multi-turn actuator that can be applied to various control solutions required in the fields of power generation, petrochemicals, steel, and water and sewage.

TM Smart Series

The non-intrusive method can be set by applying electronic control components to the mechanical TMi Series.

LTMD-Q Series

A product that can be applied in nuclear power plants and harsh environments.

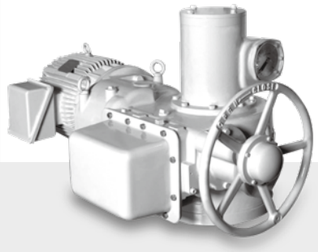

TQ Series

A quarter-turn actuator that can be applied to various control solutions required in the fields of power generation, steelworks, steel, and water and sewage.

TQ Smart Series

The non-intrusive method can be set by applying electronic control parts to the mechanical TQ Series.

WT Series

A quarter-turn actuator with simple specifications. This product can be applied to processes that require high operation speeds.

Water hoist

This product specializes the TM Series for spindle-type floodgate operation, and is supplied to water management facilities such as reservoirs, waterways, water purification plants, sewage treatment plants, etc.

LEC Series

This product is specialized for urgent closing of a floodgate. Fast operation is possible when operated manually.

TMA Series

A multi-turn actuator that can be applied to an area where electricity supply is difficult, such as power generation, petrochemicals, steel, and water and sewage facilities, and areas where electricity cannot be supplied in the event of an accident.

MW Series

This product is used to apply a multi-turn actuator to large-size BFV, ball valves, dampers, etc. A product exclusively for manual operation can also be provided.

EPD Series

A quarter-turn actuator used to drive industrial dampers.

EA / ER Series

A quarter-turn pneumatic actuator that is used for small and medium sized BFV, balls, dampers, etc.

TX SERIES

Non-penetration type, intelligent multi-turn electric valve actuator

The TX series is a next-generation intelligent actuator that can be used for gate valves, globe valves, floodgate, etc. The TX Smart series can be applied to butterfly, ball valve, etc., by combination with a reducer.

The TX series is an intelligent actuator manufactured based on the accumulated technology and divers field experience of Enertork. The TX Series can satisfy the diverse requirements of customers using built-in advanced functions such as 2-wire communication, data logging, starting by remote control, etc.

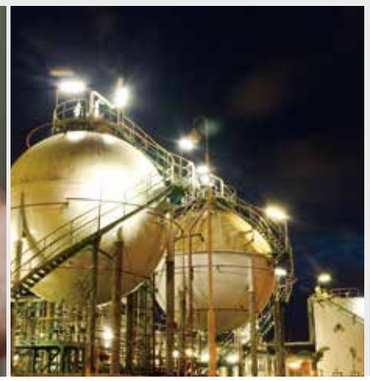

Main specifications of TX series

- Large-size graphic LCD
- Non-intrusive setting
- Portable devices can be set wirelessly by remote control or Bluetooth
- Waterproof function complying with IP68 (8m, 72 hours)
- 2-wire communication function (Profibus, Modbus, Foundation Fieldbus, HART, etc.)
- Ex d IIB, IIC explosion-proof
- LCD window and error signal maintained even in event of power failure
- Saves operation history of torque and limits
- Advance notification function for maintenance and repair
- Data logging and diagnostics

Advantages and differentiated features of TX series

- High recognition rate and various information provided by large-size LCD window
- Actuator can be set without opening the cover (non-penetration type setting) by remote control or wireless device (smartphone, etc.)
- Status of various actuators can be checked, with data logging

TX SERIES

Non-intrusive Intelligent Multi Turn Actuator

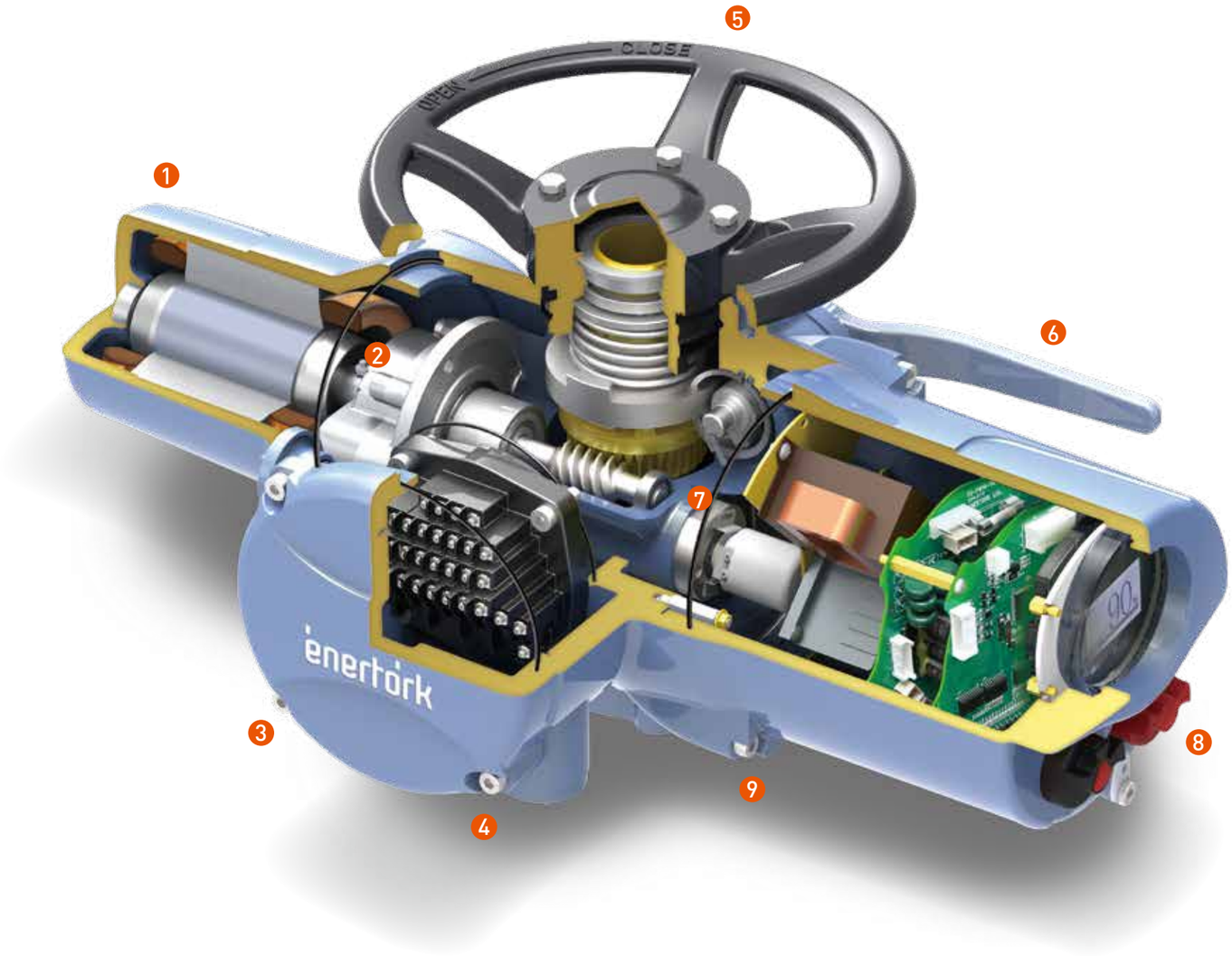

❶ Motor

Designed as low-inertia high-power motor; Class F insulation grade; Built-in thermostat for protecting motor from overload

❷ Torque sensing

Improved accuracy by measuring torque when opening and closing using two independent torque sensing devices;
Measured torque monitored in range of 40-100%

❸ Terminal block

Each terminal of the device is of separate bolting type and sealed in a double-sealed enclosure for easy on-site wiring

❹ Cable entry

1 x PF/NPT 1-1/2" for main power and
3 x PF/NPT 1" for control use

❺ Manual handle

Equipped with manual operation handle for emergency such as power failure (top handle and side handle can be selected for small model; Only side handle is available for TX-05 or higher)

❻ Manual switch lever

Motor can be conveniently switched from electric to manual using the switch lever; Automatic return type is standard for returning from manual to electric

❼ Position sensing - absolute encoder

Locations can be sensed reliably by the absolute magnetic encoder; Location information is remembered even if power is down with no battery

❽ Control unit

Various information provided with large-size graphic LCD window; Easy to maintain, as inside is made of PCB with simple structure

❾ Thrust unit

Thrust bearings and various types of driving bushings can be selected for the inside of the unit made of ductile materials.

Standard specifications

Main power	1PH, 220V, 50/60Hz 3PH, 200/380/400/415/460/480V, 50Hz 3PH, 220/380/440/460/480V, 60Hz
Motor	Insulation class F, built-in thermostat, operable within ±10% voltage fluctuation, Standard rating: S2, 15 minutes
Integrated operation panel	Non-penetration selection switch (Open/Close, Remote/Off/Local) / Motor forward / reverse actuator (magnetic contactor) / Large-size graphic LCD and status display LED / Reverse-phase protection function / Monitor relay / Save history of operation incl. operating time, usage times, torque and limit, etc. / Data logging and diagnosis function / Non-intrusive setting using remote control and wireless device without opening the cover
Position sensor	Absolute encoder with high-resolution magnetic hall sensor applied Position information stored even if power is lost and with no battery
Torque sensor	Pressure sensor (piezo sensor) Setting range: 40-100%
Output contact (position limit/torque switch)	Power Fail Relay (1 point, Rating : 8A 250VAC / 8A 30VDC) Configurable latch relay (6 points, Rating : 5A 250VAC / 5A 30VDC)
Gate positioner	0-100% is displayed on the LCD window.
Enclosure (waterproof grade)	IP-68 (72 hours duration at depth of 8 meters)
Space heater	Thermostat type (PTC-5) / 5W / 100-240VAC
Manual/electric switch	Automatic return; manually switch from electrical to manual using manual lever
Cable entry	1 x PF/NPT 1-1/2" for main power and 3 x PF/NPT 1" for control use
Operating ambient temperature	-25℃~+70℃
Vibration/Shock	Vibration: 1g rms within frequency range of 10-100Hz Shock: Up to 5g Earthquake: 2g in frequency range of 1-50Hz
Coating	Anodizing + polyester (powder) Carbon steel: Double-coated epoxy paint Finish color: Munsell No. 2.5PB 5/2

Optional

Motor	Insulation class H
Temperature range	-40℃~+50℃
Adding output contacts (position limit/torque switch)	Configurable latch relay (10 points, Rating : 5A 250VAC/5A 30VDC)
Cable entry	NPT, G, etc.
Transmitter (position value)	DC 4-20mA
Transmitter (torque value)	DC 4-20mA
Proportional control	Input : DC 4-20mA / Output : DC 4-20mA
Explosion-proof	Exd IIB T4 / Exd IIC T4
Fieldbus control (2-wire control)	Profibus-DP(Single/Redundancy) / Modbus-RTU / Foundation Fieldbus-H1 / HART / Wireless
Motor forward / reverse actuator	SSR (Solid State Relay) ※Recommended when performing proportional control
Others	Surge protector, arrester

Waterproof grade

ENERTORK actuators are designed with improved protection as IP-68(8m water depth for 72 hours) in accordance with IEC-60529. For guarantee of the enclosure protection IP68, suitable cable glands must be used. Cable glands are available from ENERTORK upon customer request.

Explosion-proof grade

For installation of actuators in hazardous or explosive areas, explosion-proof actuators must be installed.
TX-Series are tested and certified by concerning authorities in accordance with IEC-60079-0/1 standards and related regulation

Classification of explosion proof			
Products	Authorities	Classification	Regulation
TX-Series	FM(USA)	Class Ⅰ, Division 1, Groups C, D; T4 Class Ⅱ, Ⅲ, Division 1, Groups E, F, G; T4	FM 3600/3615
	ATEX	Ⅱ 2 G Ex db IIC T4 Gb	IEC-60079-0/1
	Korea	Exd ⅡC T4	IEC-6009-0
Remote Control Kit	Korea	Exia ⅡB T4	IEC-6009-0/11

Fieldbus Communication

PROFIBUS	- Fieldbus is a communication protocol that is the most reliable and commonly used in industrial sites that process discrete data such as water treatment for power generation at home and abroad. This product was certified by Profibus International according to EN 50170. - Supports Profibus DP V0, Profibus DP V1, and Profibus REDCOM redundancy.
MODBUS	- This product faithfully complies with the Modbus communication protocol of Modicon, as the communication protocol that can be most universally and easily applicable to industrial sites. This product can be applied on site more cheaply and quickly than other communication protocols. - Modbus-RTU products are currently supplied, and customers can select other options such as Modbus-ASCII and Modbus-TCP.
F/F	- A communication protocol used in the field of process control such as oil and gas; This product was certified by the Fieldbus Foundation in compliance with IEC-61158.
HART	- The HART (Highway Address Remote Transducer) communication protocol performs control by adding digital data on 4-20mA transmission signals. As it is designed to use OSI Layer 1, 2, and 7, the user's communication efficiency can be increased. - This product has been registered in the HCF (HART Communication Foundation).

Actuator installation environment

Temperature condition (Ambient temperature)	► -25 ~ 70℃ ► Options for low temperature (-40 - 50℃) can be selected * Sunshade installation recommended if actuator is exposed to direct sunlight in high-temperature area
Response to vibration and shock	type / Level Vibration: Total 1g rms in frequency range of 10-100Hz Shock: Up to 5g Earthquake: 2g acceleration in frequency range of 1-50Hz Noise: Below 70db at 1m * Recommended to install model that can separate the operation unit when installing in an area with vibrations
Operating life	DUTY / Model / Specifications ON-OFF & / TX-01, TX-03, TX-05 / 10,000 cycles at medium 30% rated torque operation and 100% rated torque operation (when closing) inching / TX-1 / 5,000 cycles at medium 30% rated torque operation and 100% rated torque operation (when closing) Modulating / TX-01, TX-03, TX-05 / 1,200,000 cycles at 30% rated torque operation Modulating / TX-1 / 500,000 cycles at 30% rated torque operation

Function for protecting actuator and securing operational stability

Double-sealed enclosure	► Protects actuator from moisture and dust
Non-intrusive setting	► Actuator can be set without opening the cover
Non-penetrative switch	► Switch structure using magnetic force to completely isolate inside and outside to improve secure sealing
Torque bypass function	► Over-torque can be set so as not to be activated for 5 seconds when opened after full closing to prevent valve jamming.
Reverse-phase detection and automatic phase conversion	► Prevents incorrect wiring by generating an error or automatically converting the phase to prevent problems that can occur when the 3-phase power supply is wired incorrectly.
Prevention of lightning damage	► Protects internal circuits from external signals or lightning using an opto-isolator
Motor thermostat	► By default, two thermostats are installed to prevent damage due to motor overload (3 thermostats can be installed optionally for a 3-phase motor)

LCD functions/description

Displays position information and status; position information and torque; position information and request value (graphic); decimal point position information and status

1 Position information and status

Displays valve position as integer in range of 0-100%.

2 Position information and torque

Displays valve position value as opening degree bar and integer, and displays torque value as 40-100% when actuator is running

3 Position information and request value (graphic)

Displays opening degree as integer in range of 0-100% and analyzes remote signals to display requested valve position value with valve-shaped image

4 Decimal point position information and status

Displays valve position to first decimal place in range of 0-100%

Setup menu

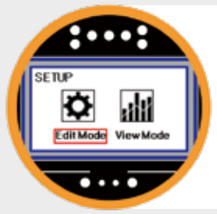

1 Tree-type menu structure

Users can view the setup menu conveniently with the tree type menu structure.

2 View mode initial setting

Users can check various parameter set values of the actuator.

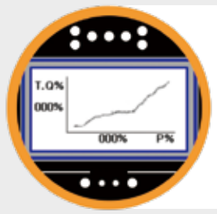

3 Graphical torque data analysis

Users can check the real-time torque value according to the actuator opening degree in a graph format that is easy to understand.

4 LOG-DATA analysis

Users can check service and alarm logs.
When an error occurs on site, users can check for normal operation of the actuator to identify the exact cause of the incident.

TX SERIES

Torque Table

Model	rpm		SPEED-TORQUE TABLE								MECHANICAL DATA					
		60Hz	★ 21	★ 28	★ 42	★ 56	★ 84	112	168	224	Allowable thrust		Allowable stem dia. max. mm		Flange dia. ISO No. Tap PCD/size Pilot dia. mm	Weight (kg)
		50Hz	★ 18	★ 24	★ 36	★ 49	★ 73	98	147	196						
	Motor (kW)	Max. torque : Nm									ton	kN	key	screw		
TX-01	0.2	Max. adjustable torque	85	75	55						7	68	34	40	125 F10 102/4xM10 70	40.5
	0.4	Max. adjustable torque	150	145	110	80	60									41.5
	0.75	Max. adjustable torque	200	200	200	150	115	100	70	55						44.5
TX-03	0.75	Max. adjustable torque	300	300	220	170	120	105	75	55	10	98	40	48	175 F14 140/4xM16 100	55
	1.5	Max. adjustable torque	400	400	400	300	240	205	145	105						60
TX-05	1.5	Max. adjustable torque	600	600	445	335	240	205	140	105	13	124	50	58	175 F14 140/4xM16 100	77
	2.2	Max. adjustable torque	600	600	600	490	350	295	205	155						80
	3.7	Max. adjustable torque	600	600	600	600	575	500	350	250						84
TX-1	2.2	Max. adjustable torque	1120	920	670	510	365	295	205	160	16	156	60	72	210 F16 165/4xM20 130	113
	3.7	Max. adjustable torque	1200	1200	1130	850	610	495	345	265						115
	5.5	Max. adjustable torque	1200	1200	1200	1200	905	740	515	390						117

1. Above speed-torque table may vary according to actuator specifications.
2. (★) Self-locking is possible with these RPM speeds

Outside view of TX-01 and 03

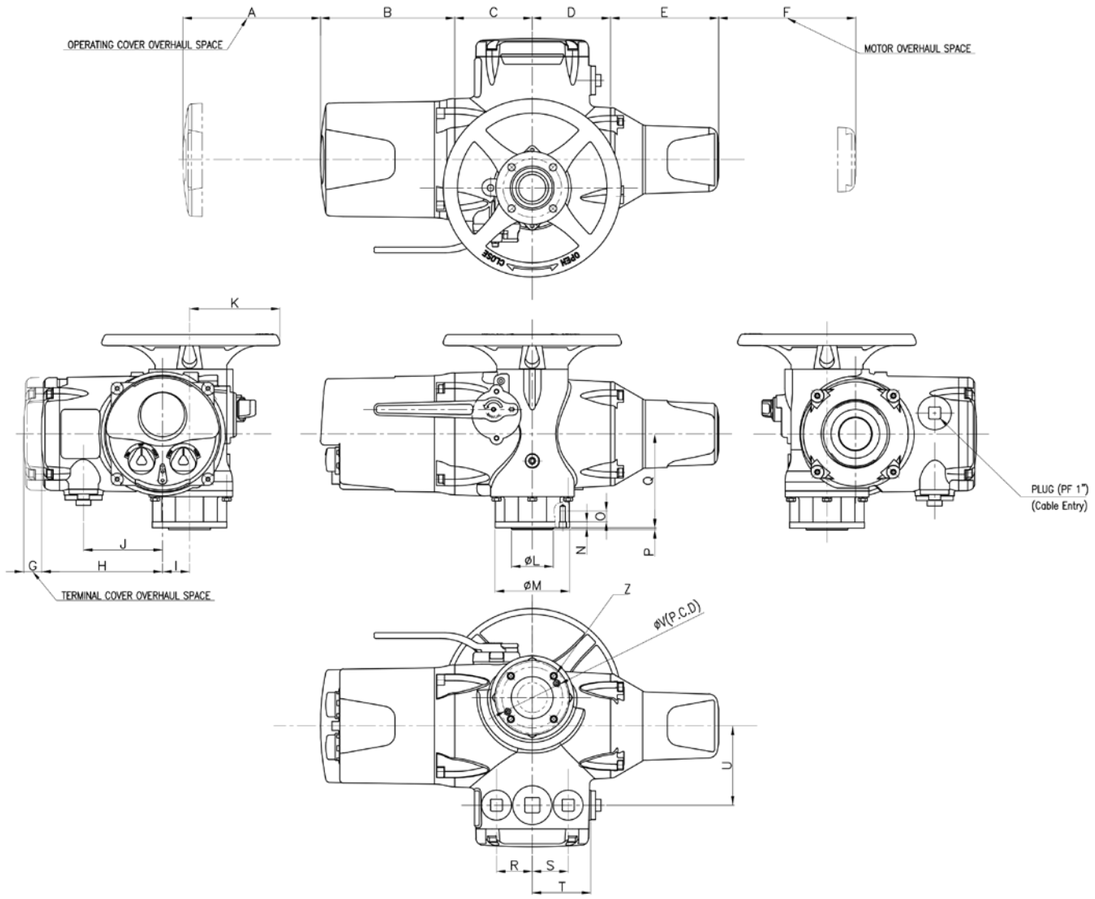

Model	A	B	C	D	E	F	G	H	I	J	K	L	M	N	O	P	Q	R	S	T	U	V	Z	ISO NO.
TX-01	230	225	130	131	225	230	30	203	46	133	150	70	125	10	20	3	157	60	60	98	132.5	102	4-M10	F10
TX-03	230	225	145	147.5	225	230	30	227	60	157	225	100	175	10	28	4	180	60	60	98	157	140	4-M16	F14

Outside view of TX-05 and 1

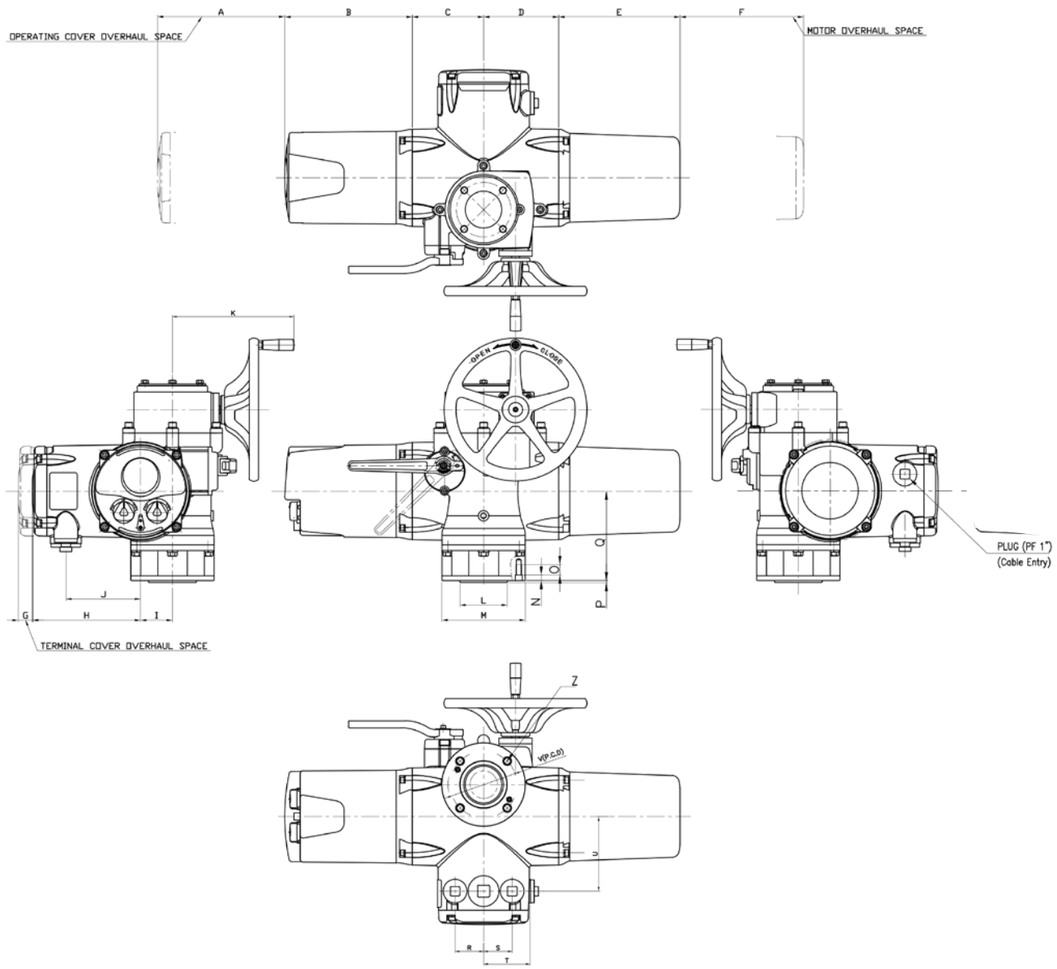

Model	A	B	C	D	E	F	G	H	I	J	K	L	M	N	O	P	Q	R	S	T	U	V	Z	ISO NO.
TX-05	260	268	150	157.5	255	260	30	227	67	157	255	100	175	10	28	4	188	60	60	98	157	140	4-M16	F14
TX-1	260	268	177.5	197.5	270	285	30	262	85	177	276.5	130	210	15	30	5	217	60	60	98	177	165	4-M20	F16

Selection Guide

The following basic information may be useful in finding solutions for motor operated valves.

No	Item	Description	Spec
1	Valve type & Size	Multi-turn	
		Quarter-turn	
2	Fluid of line	Fluid name	
3	Design/Operation pressure	kg/㎠ or psi	
4	Design/Operation temperature	℃ or ℉	
5	Operating Duty	On-Off and inching	
		Modulating	
6	Main Power Supply	Volts, Hz, Phase	
7	Operating Time or Turns	Sec from full closed to full open	
		Turns from full closed to full open	
8	Required Seating Torque	N·m or Kgf·m	
9	Running Torque	N·m or Kgf·m if known	
10	Thrust	KN or Ton	
11	Enclosure	Ingress of water : IP68(8m water depth for 72 hours)	
		Explosion proof	
12	Local Indication	Standard display	
13	Remote Control	Contacts	
		Analogue : 4~20mA	
		Fieldbus-network : Type	
14	Remote Indication	Voltage free contacts	
		4~20mA position indication	
		Fieldbus network	
15	Environmental conditions for installation	High Temperature	
		Low Temperature	
		Vibration	

Special Option

■ Separated Integral Type

- If it is dangerous or uncomfortable for the operator to use the integrated type operation panel, it can be relocated.
- If piping vibrates severely, the integrated operation panel can be relocated to protect electronic devices.

There are two types of the integrated operation panel - the standing type that is secured to the floor, and the wall bracket type that can be attached to the wall.

▼Wall Bracket Type

▼Stand Type

Special Option

■ ML TYPE (Linear Thrust Unit)

The ML series is a device that performs linear motion in combination with the TM series.

A-type is directly connected to TM series, and B-type operates lever arrangement by mounting of the hinge bracket.

FEATURES

1. Adopted the international flange standard of EN ISO 5211
2. Water tight as protection grade of IP67
3. Self-locking
4. Allowable temperature from -25℃ to +80℃
5. Short -time duty S2 -15 min, max. 3 cycles (OPEN-CLOSE-OPEN) based on mean thrust and standard ambient temperature

▲A-TYPE

▲B-TYPE

External view
A - TYPE

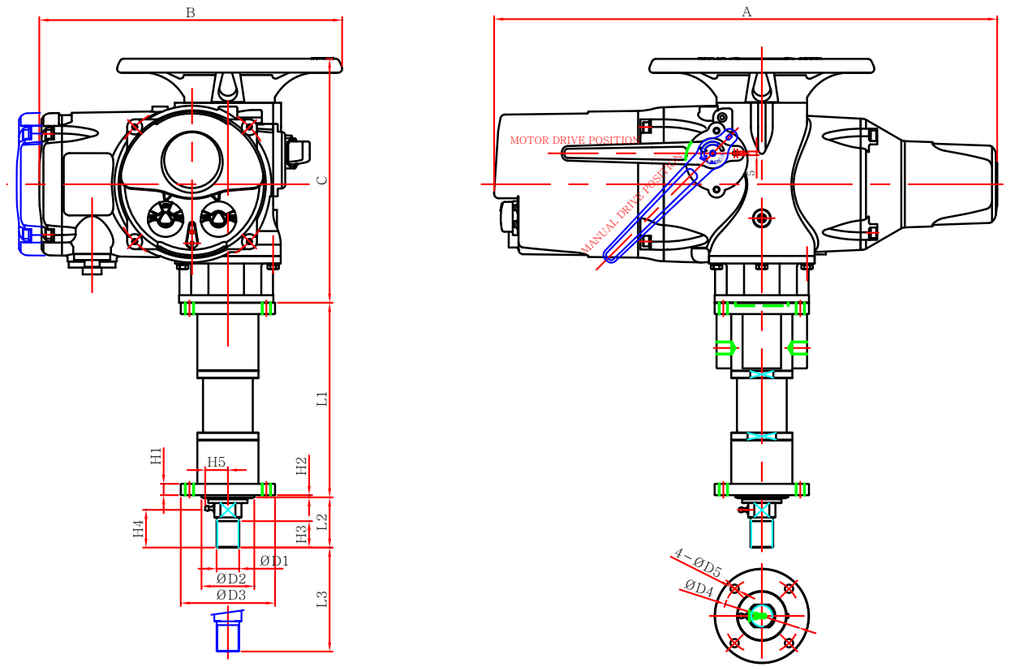

External view
B - TYPE

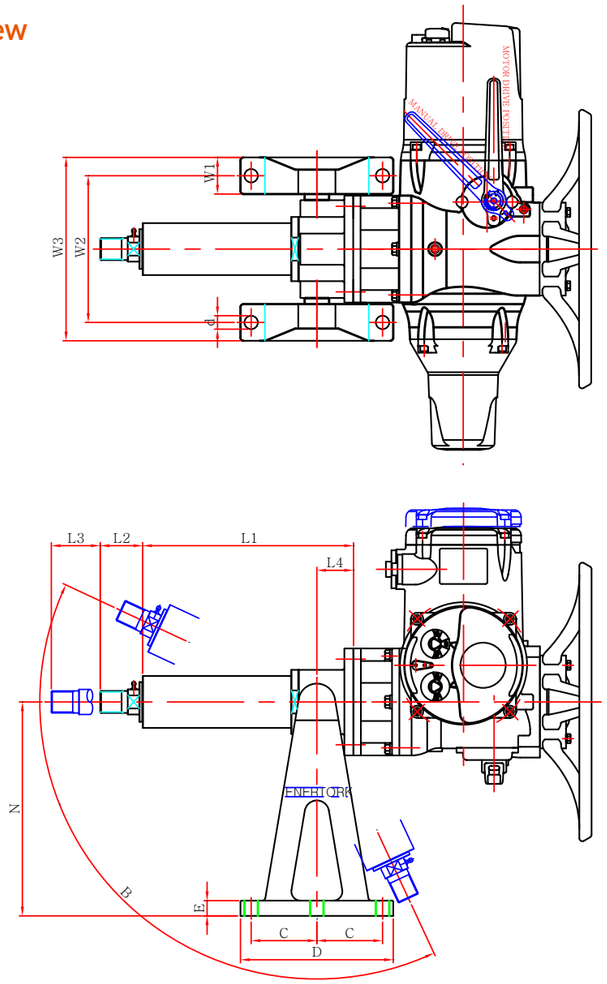

Model	A (Max.)	B	C	L1	L2	L3	D1	D2	D3	D4	D5	H1	H2	H3	H4	H5
ML01-63-A	711	400	323	268	69.5	63	M30	70	125	102	11	15	3	35	52	30
ML01-125-A	711	400	323	330	69.5	125	M30	70	125	102	11	15	3	35	52	30
ML01-250-A	711	400	323	455	69.5	250	M30	70	125	102	11	15	3	35	52	30
ML01-400-A	711	400	323	605	69.5	400	M30	70	125	102	11	15	3	35	52	30
ML04-63-A	742.5	515	389.5	322	75.5	63	M36	100	175	140	18	15	4	35	57	32.5
ML04-125-A	742.5	515	389.5	384	75.5	125	M36	100	175	140	18	15	4	35	57	32.5
ML04-250-A	742.5	515	389.5	509	75.5	250	M36	100	175	140	18	15	4	35	57	32.5
ML04-400-A	785	515	389.5	659	75.5	400	M36	100	175	140	18	15	4	35	57	32.5

Model	L1	L2	L3	L4	A (Max.)	B (Max.)	C	D	E	N	W1	W2	W3	d
ML01-63-B	272	65.5	63	60	25°	140°	107.5	250	25	350	60	200	260	22
ML01-125-B	324	65.5	125	60	25°	140°	107.5	250	25	350	60	200	260	22
ML01-250-B	459	65.5	250	60	25°	140°	107.5	250	25	350	60	200	260	22
ML01-400-B	609	65.5	400	60	25°	140°	107.5	250	25	350	60	200	260	22
ML04-63-B	328	69.5	63	60	25°	140°	M36	100	175	140	18	15	4	35
ML04-125-B	742.5	515	389.5	384	25°	140°	M36	100	175	140	18	15	4	35
ML04-250-B	742.5	515	389.5	509	25°	140°	M36	100	175	140	18	15	4	35
ML04-400-B	785	515	389.5	659	25°	140°	M36	100	175	140	18	15	4	35

Ever Reliable
enertork

Customer service

Model selection : The performance of electric valves, electric flooding gates, and electric dampers depends on the correct selection of the actuator from the aspect of rotation speed and torque. Cost effectiveness is also an important factor when selecting an actuator. Enertork is prepared to assist customers in all processes necessary for actuator selection, such as torque/thrust calculation, installation method, and selection of options.

Spare parts supply : Both individual parts and component assembly parts will be delivered in a timely manner.

Electric valve supply : Enertork supplies actuators. If desired by the customer, Enertork can also supply electric valves, electric flooding gates, and electric dampers with full quality assurance.

Manual valve motorization/related installation parts supply : When a customer motorizes manual valves or installs an actuator on site, the customer needs various installation parts such as mounting flanges, stands, levers, fittings, etc. Enertork is prepared to assist customers to acquire the proper related installation parts from the design phase to the delivery phase.

Standard materials table

Part		Material	KS/JIS NO.	ASTM NO.
Enclosure		Alloy die casting(ALDC)	D6006/H5302	B85
Thrust unit		Ductile cast iron(FCD)	D4302/G5502	A536
Worm		Chromium molybdenum(SCM)	D3711/G4105	A322
Worm heel		High strength brass casting	Enertork standard	Enertork standard
Stem bush	Key	Carbon steel(SM45C)	D3752/G4051	1050
	Screw	Copper alloy(C6782BE)	D5101/H3250	B16
		Nickel aluminum bronze(ALBC3)-Option	D6025/H5114	B148
Grease		Lithium grease(EP 0)	M2130/K2220	-

Warranty

All processes, ranging from design to delivery, including the parts and component assembly parts inspection, are thoroughly controlled in accordance with ISO9001 and our own quality assurance procedures. The torque values, sleeve RPM, current value, voltage, limit switch and torque switch performance, and manual/electric switching performance of each actuator are inspected before delivery, and a test result report is issued for each actuator.

Reliable Enertork

1 Showroom 2 Training room 3 Product design 4 Quality assurance
5 6 Processing 7 Assembly 8 Testing and inspection

Enertork

Ever Reliable

▪ Status of major certification acquisition

DNV·GL

MANAGEMENT SYSTEM CERTIFICATE

This is to certify that the management system of

Enertork Ltd.
344 Neungpae-ro, Neungpae-myeon, Yeoju-si, Gyeonggi-do, Korea

has been found to conform to the Quality Management System standard:
ISO 9001:2015, KS Q ISO 9001:2015

This certificate is valid for the following scope:
DESIGN AND MANUFACTURE OF ELECTRIC ACTUATOR

ISO9001 Certified by DNV

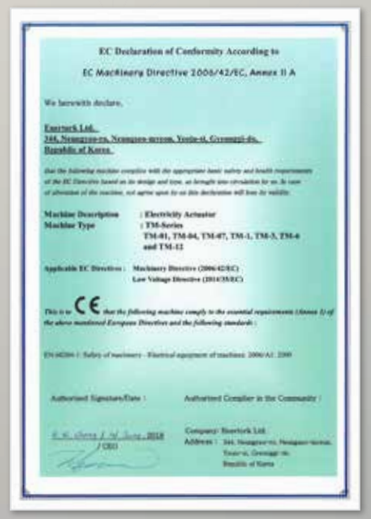
EC Declaration of Conformity According to
EC Machinery Directive 2006/42/EC, Annex II A

We herewith declare,

Enertork Ltd.
344, Neungpae-ro, Neungpae-myeon, Yeoju-si, Gyeonggi-do,
Republic of Korea

that the following machine complies with the appropriate basic safety and health requirements of the EC Directive based on its design and type, as brought into circulation by us. In case of alteration of this machine, not agreed upon by us this declaration will lose its validity.

Machine Description : **Electricity Actuator**
Machine Type : **TM-Series**
TM-01, TM-04, TM-07, TM-1, TM-3, TM-6 and TM-12

Applicable EC Directive : **Machinery Directive (2006/42/EC)**
Low Voltage Directive (2014/35/EC)

This is to CE that the following machine comply to the essential requirements (Annex I) of the above mentioned European Directive and the following standards :

EN 60204-1 : Safety of machinery - Electrical equipment of machines: 2006/A1: 2009

Authorised Signature/Date : Authorised Compiler in the Community :

Company: Enertork Ltd.
Address : 344, Neungpae-ro, Neungpae-myeon, Yeoju-si, Gyeonggi-do, Republic of Korea

CE Certification

EU-TYPE EXAMINATION CERTIFICATE

1 Equipment or Protective systems intended for use in Potentially Explosive Atmospheres - Directive 2014/34/EU
2 EU-Type Examination Certificate No: FM16ATEX0003X
3 Equipment or protective system: (Type Reference and Name): TM-01 and TM-04 Electric Actuator
5 Name of Applicant: Enertork Ltd
6 Address of Applicant: 44-4 Oppo-Ri Neungpae-Myeon Yeoju-Gun, Gyeonggi-Do 469-815 Republic of Korea
7 This equipment or protective system and any acceptable variation thereto is specified in the schedule to this certificate and documents therein referred to.
8 FM Approvals Ltd. notified body number 1725 in accordance with Article 17 of Directive 2014/34/EU of 26 February 2014, certifies that this equipment has been found to comply with the Essential Health and Safety Requirements relating to the design and construction of equipment intended for use in potentially explosive atmospheres given in Annex II to the Directive.
The examination and test results are recorded in confidential report number:
0A0008 dated 19th February 2015
9 Compliance with the Essential Health and Safety Requirements, with the exception of those identified in Item 18 of the schedule to this certificate, has been assessed by compliance with the following documents:
EN 60079-0: 2012+A11: 2013, EN 60079-1: 2014, and EN 60529: 1991 + A1:1999
10 If the sign 'X' is placed after the certificate number, it indicates that the equipment is subject to specific conditions of use specified in the schedule to this certificate.
11 This EU-Type Examination certificate relates only to the design, examination and tests of the specified equipment or protective system in accordance to the directive 2014/34/EU. Further requirements of the Directive apply to the manufacturing process and supply of this equipment or protective system. These are not covered by this certificate.
12 The marking of the equipment or protective system shall include:
Ex d IIC Ga ex ib IIB T4 Ga Ta = -20°C to +40°C IP66

Nick Gomez
Certification Manager, FM Approvals Ltd.
Issue date: 19th January 2017

THIS CERTIFICATE MAY ONLY BE REPRODUCED IN ITS ENTIRETY AND WITHOUT CHANGE

Page 1 of 3

FM/ATEX Certification

FM Approvals

FM Approvals
1151 Boston Providence Turnpike
P.O. Box 9102, Norwood, MA 02062 U.S.A.
T +781 762 4000 F +781 762 9375 www.fmapprovals.com

CERTIFICATE OF COMPLIANCE
HAZARDOUS (CLASSIFIED) LOCATION ELECTRICAL EQUIPMENT

This certificate is issued for the following equipment:

TM electric Electric Actuator
EP-(-F-)-(-E)-(-T-)-(-1-)-(-4-)-(-6-)-(-7-)-(-9-)-(-12-) Type 4 / IP66
a = Model Number: 01 or 04
b = Motor Type: none or -r
c = Control Type: DA, DAC, DAC DD, DDC, DC, DPR, DAO, DFT or DHA
d = Motor (Hp): When a = 01 d = 0.4, 0.6, 0.75 or 1.5
When a = 04 d = 0.75, 1.5, 2.2 or 3.7
e = Voltage: 220Vac (3ph), 380Vac (3ph), 400Vac (3ph), 440Vac (3ph), 480Vac (3ph), 460Vac (3ph), 440Vac (3ph)

Equipment Ratings:
As Explosionproof for Class I, Division 1, Groups C and D T4, and Hazardous for Class I, Zone 1, Hex II B T4, for hazardous (classified) locations, indoors and outdoor. Type 4 / IP66, with an ambient temperature range of -20°C to +40°C

FM Approved for:

Enertork Ltd
Yeoju-Gun, Gyeonggi-Do, Republic of Korea

FM Approvals AC-MR 3000934
Page 1 of 2

FM Approvals

DNV·GL

MANAGEMENT SYSTEM CERTIFICATE

This is to certify that the management system of

Enertork Ltd.
344 Neungpae-ro, Neungpae-myeon, Yeoju-si, Gyeonggi-do, Korea

has been found to conform to the Environmental Management System standard:
ISO 14001:2015, KS I ISO 14001:2015

This certificate is valid for the following scope:
DESIGN AND MANUFACTURE OF ELECTRIC ACTUATOR

ISO14001 Certified by DNV

KCs ktl

M2012-081048-01.B

안 전 인 증 서

ELECTRIC ACTUATOR

한국산업기술시험원장

KCs explosion-proof certification

SGS TÜV

CERTIFICATE NO FS/71/220/16/0159 PAGE 1/1

LICENCE HOLDER
ENERTORK LTD. HEADQUARTER
#344, NEUNGPAE-RO, NEUNGSEO-MYEON, YEOJU-SI, KYEONGGI-DO, KOREA

MANUFACTURING PLANT
ENERTORK LTD. FACTORY
#344, NEUNGPAE-RO, NEUNGSEO-MYEON, YEOJU-SI, KYEONGGI-DO, KOREA

PROJECT NO/ID
LICENSED TEST MARK
CERT. REPORT NO

Tested according to
Certified product(s)
Model(s)
Technical Data and Parameter
Specific Requirements

Certification Body for Functional Safety
SGS-TÜV Saar GmbH

Munich, 2016-12-04

CERTIFICATE

SIL certification

ЕВРАЗИЙСКИЙ ЭКОНОМИЧЕСКИЙ СОЮЗ

ЕАС

СЕРТИФИКАТ СООТВЕТСТВИЯ

№ ЕАЭС RU C-RU.ИМ.В.00156/19

Серия RU № 0111979

ОРГАН ПО СЕРТИФИКАЦИИ

ЗАЯВИТЕЛЬ

ИЗГОТОВИТЕЛЬ

ПРОДУКЦИЯ

КОД ТН ВЭД ЕАЭС

СООТВЕТСТВУЕТ ТРЕБОВАНИЯМ

СЕРТИФИКАТ СООТВЕТСТВИЯ ВЫДАН НА ОСНОВАНИИ

ДОПОЛНИТЕЛЬНАЯ ИНФОРМАЦИЯ

СРОК ДЕЙСТВИЯ С

ВЕЛИКИЙ НОВГОРОД

TRCU Certification